# Hi-MO 5m

## LR5-54HIH
# 400~420M

- Suitable for distributed projects
- Advanced module technology delivers superior module efficiency
  - M10 Gallium-doped Wafer
  - Integrated segmented ribbons
  - 9-busbar Half-cut Cell
- Excellent outdoor power generation performance
- High module quality ensures long-term reliability



12 12-year Warranty for Materials and Processing

25 25-year Warranty for Extra Linear Power Output

**Complete System and Product Certifications**

IEC 61215, IEC 61730, UL 61730

ISO9001:2015: ISO Quality Management System

ISO14001: 2015: ISO Environment Management System

ISO45001: 2018: Occupational Health and Safety

TS62941: Guideline for module design qualification and type approval

LONGi

# Hi-MO 5m

# LR5-54HIH 400~420M

| 21.5% | 0~3% | <2% | 0.55% | HALF-CELL |
|---|---|---|---|---|
| MAX MODULE EFFICIENCY | POWER TOLERANCE | FIRST YEAR POWER DEGRADATION | YEAR 2-25 POWER DEGRADATION | Lower operating temperature |

## Additional Value

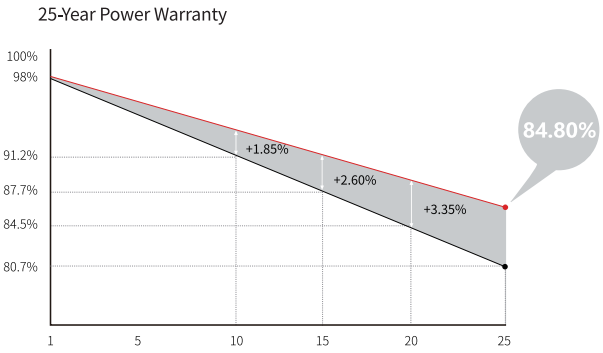


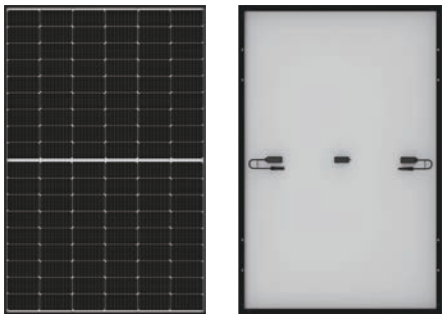

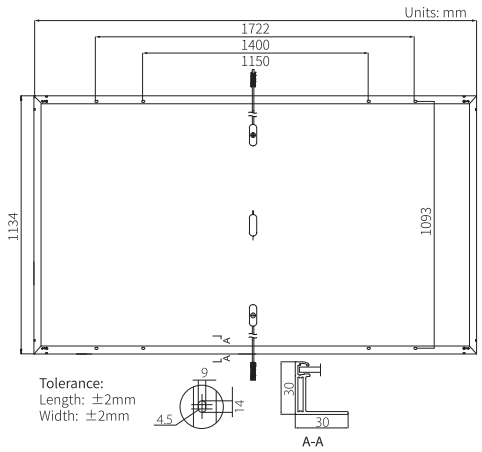


## Mechanical Parameters

| | |
|---|---|
| Cell Orientation | 108 (6×18) |
| Junction Box | IP68, three diodes |
| Output Cable | 4mm², 1200mm<br>length can be customized |
| Glass | Single glass, 3.2mm coated tempered glass |
| Frame | Anodized aluminum alloy frame |
| Weight | 21.5kg |
| Dimension | 1722×1134×30mm |
| Packaging | 36pcs per pallet / 216pcs per 20' GP / 936pcs per 40' HC |

## Electrical Characteristics

STC : AM1.5 1000W/m² 25°C NOCT : AM1.5 800W/m² 20°C 1m/s Test uncertainty for Pmax: ±3%

| Module Type | LR5-54HIH-400M | | LR5-54HIH-405M | | LR5-54HIH-410M | | LR5-54HIH-415M | | LR5-54HIH-420M | |
|---|---|---|---|---|---|---|---|---|---|---|
| Testing Condition | STC | NOCT | STC | NOCT | STC | NOCT | STC | NOCT | STC | NOCT |
| Maximum Power (Pmax/W) | 400 | 299.0 | 405 | 302.7 | 410 | 306.5 | 415 | 310.2 | 420 | 313.9 |
| Open Circuit Voltage (Voc/V) | 36.75 | 34.55 | 37.00 | 34.79 | 37.25 | 35.02 | 37.50 | 35.26 | 37.75 | 35.49 |
| Short Circuit Current (Isc/A) | 13.76 | 11.13 | 13.83 | 11.18 | 13.88 | 11.22 | 13.94 | 11.27 | 14.01 | 11.32 |
| Voltage at Maximum Power (Vmp/V) | 30.75 | 28.56 | 31.00 | 28.80 | 31.25 | 29.03 | 31.49 | 29.25 | 31.73 | 29.47 |
| Current at Maximum Power (Imp/A) | 13.01 | 10.47 | 13.07 | 10.52 | 13.12 | 10.56 | 13.18 | 10.60 | 13.24 | 10.65 |
| Module Efficiency(%) | 20.5 | | 20.7 | | 21.0 | | 21.3 | | 21.5 | |

## Operating Parameters

| | |
|---|---|
| Operational Temperature | -40°C ~ +85°C |
| Power Output Tolerance | 0 ~ 3% |
| Voc and Isc Tolerance | ±3% |
| Maximum System Voltage | DC1500V (IEC/UL) |
| Maximum Series Fuse Rating | 25A |
| Nominal Operating Cell Temperature | 45±2°C |
| Protection Class | Class II |
| Fire Rating | UL type 1 or 2<br>IEC Class C |

## Mechanical Loading

| | |
|---|---|
| Front Side Maximum Static Loading | 5400Pa |
| Rear Side Maximum Static Loading | 2400Pa |
| Hailstone Test | 25mm Hailstone at the speed of 23m/s |

## Temperature Ratings (STC)

| | |
|---|---|
| Temperature Coefficient of Isc | +0.050%/°C |
| Temperature Coefficient of Voc | -0.265%/°C |
| Temperature Coefficient of Pmax | -0.340%/°C |

LONGi

No.8369 Shangyuan Road, Xi'an Economic And Technological Development Zone, Xi'an, Shaanxi, China.
**Web:** en.longi-solar.com

Specifications included in this datasheet are subject to change without notice. LONGi reserves the right of final interpretation. (20220208DraftV02)